Smart Energy Center

inter solar award 2019 WINNER

Higher Revenue
Max. efficiency 98.6%

Simple & Easy
17 kg

Battery Ready
Plug & Play battery interface

Safe & Reliable
Arc fault protection

Efficiency Curve

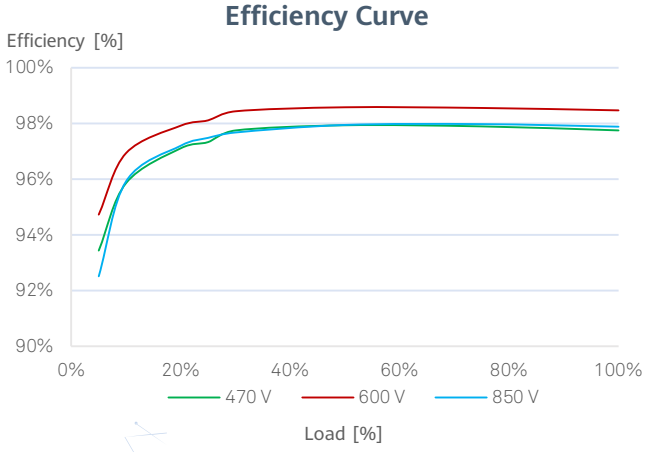

Circuit Diagram

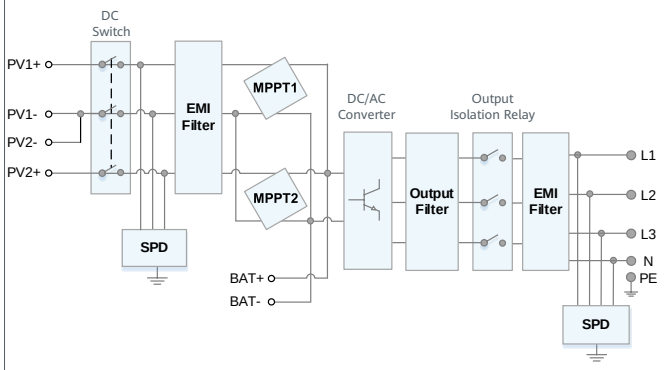

SUN2000-3/4/5/6/8/10KTL-M0

Technical Specification

Technical Specification	SUN2000 -3KTL-M0	SUN2000 -4KTL-M0	SUN2000 -5KTL-M0	SUN2000 -6KTL-M0	SUN2000 -8KTL-M0	SUN2000 -10KTL-M0
Efficiency						
Max. efficiency	98.2%	98.3%	98.4%	98.6%	98.6%	98.6%
European weighted efficiency	96.7%	97.1%	97.5%	97.7%	98.0%	98.1%
Input						
Recommended max. PV power	6,150 Wp	8,200 Wp	10,250 Wp	12,300 Wp	14,880 Wp	14,880 Wp
Max. input voltage	1,100 V					
Operating voltage range	140 V ~ 980 V					
Start-up voltage	200 V					
Full power MPPT voltage range	140 V ~ 850 V	190 V ~ 850 V	240 V ~ 850 V	285 V ~ 850 V	380 V ~ 850 V	470 V ~ 850 V
Rated input voltage	600 V					
Max. input current per MPPT	11 A					
Max. short-circuit current	15 A					
Number of MPP trackers	2					
Max. number of inputs	2					
Output						
Grid connection	Three-phase					
Rated output power	3,000 W	4,000 W	5,000 W	6,000 W	8,000 W	10,000 W
Max. apparent power	3,300 VA	4,400 VA	5,500 VA	6,600 VA	8,800 VA	11,000 VA [1]
Rated output voltage	220 Vac / 380 Vac, 230 Vac / 400 Vac, 3W / N+PE					
Rated AC grid frequency	50 Hz / 60 Hz					
Max. output current	5.1 A	6.8 A	8.5 A	10.1 A	13.5 A	16.9 A
Adjustable power factor	0.8 leading ... 0.8 lagging					
Max. total harmonic distortion	⩽ 3 %					
Features & Protections						
Input-side disconnection device	Yes					
Anti-Islanding protection	Yes					
DC reverse polarity protection	Yes					
Insulation monitoring	Yes					
DC lightning protection	Yes					
AC lightning protection	Yes					
Residual current monitoring	Yes					
AC overcurrent protection	Yes					
AC short-circuit protection	Yes					
AC overvoltage protection	Yes					
Arc fault protection	Yes					
Ripple receiver control	Yes					
DC MBUS to optimizer	No					
General Data						
Operating temperature range	-25 ~ + 60 °C (-13 °F ~ 140 °F) (Derating above 45 °C @ Rated output power)					
Relative operating humidity	0 %RH ~ 100 %RH					
Operating altitude	0 - 4,000 m (13,123 ft.) (Derating above 3000 m)					
Cooling	Natural convection					
Display	LED Indicators; Integrated WLAN + FusionSolar App					
Communication	RS485; WLAN via Smart Dongle-WLAN; 4G / 3G / 2G via Smart Dongle-4G					
Weight (incl. mounting bracket)	17 kg (37.5 lb)					
Dimension (incl. mounting bracket)	525 x 470 x 166 mm (20.7 x 18.5 x 6.5 inch)					
Degree of protection	IP65					
Battery Compatibility						
Battery Interface	Integrated [2]					
Standard Compliance (more available upon request)						
Certificate	EN/IEC 62109-1, EN/IEC 62109-2, IEC 62116					
Grid connection standards	G98, G99, EN 50438, CEI 0-21, VDE-AR-N-4105, VDE-AR-N-4110, AS 4777, C10/11, ABNT, UTE C15-712, RD 1699, TOR D4, NRS 097-2-1, IEC61727, IEC62116, DEWA 2.0					

*1 VDE-AR-N-4105: 10,000 VA; C10 / 11: 10,000 VA
*2 Compatible battery solution will be available in 2020 H2